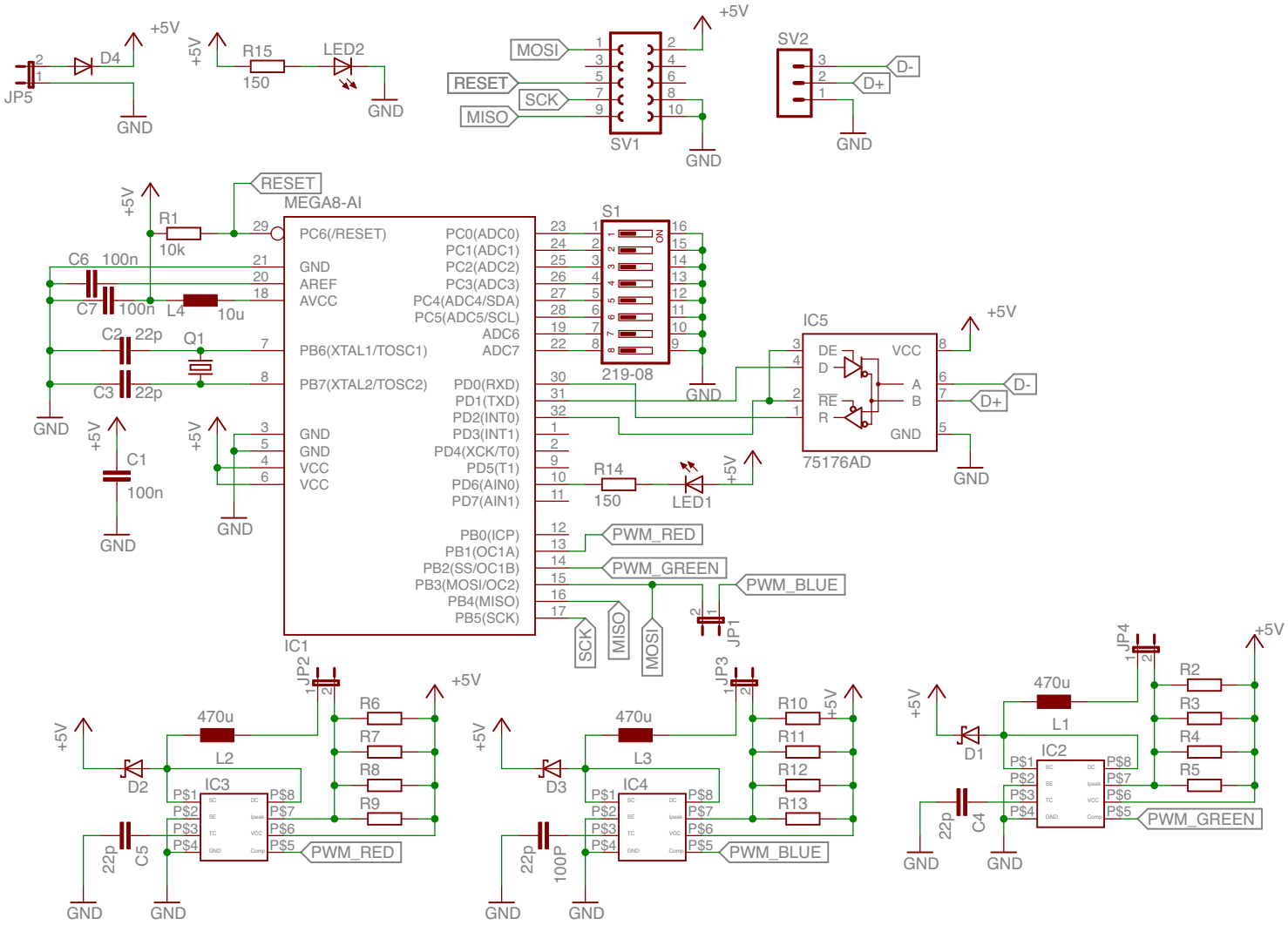
JP5
D4
+5V
GND
R15
150
LED2
MOSI
RESET
SCK
MISO
SV1
SV2
D-
D+
MEGA8-AI
R1
10k
C6 100n
C7 100n
L4 10u
C2 22p
C3 22p
Q1
C1 100n
PC6(/RESET)
GND
AREF
AVCC
PB6(XTAL1/TOSC1)
PB7(XTAL2/TOSC2)
GND
GND
VCC
VCC
PC0(ADC0)
PC1(ADC1)
PC2(ADC2)
PC3(ADC3)
PC4(ADC4/SDA)
PC5(ADC5/SCL)
ADC6
ADC7
PD0(RXD)
PD1(TXD)
PD2(INT0)
PD3(INT1)
PD4(XCK/T0)
PD5(T1)
PD6(AIN0)
PD7(AIN1)
PB0(ICP)
PB1(OC1A)
PB2(SS/OC1B)
PB3(MOSI/OC2)
PB4(MISO)
PB5(SCK)
PWM_RED
PWM_GREEN
PWM_BLUE
IC1
S1
219-08
R14
150
LED1
IC5
75176AD
DE
D
RE
R
VCC
A
B
GND
JP1
JP2
JP3
JP4
470u
L2
L3
L1
D2
D3
D1
IC3
IC4
IC2
R6
R7
R8
R9
R10
R11
R12
R13
R2
R3
R4
R5
22p
C5
100P
C4